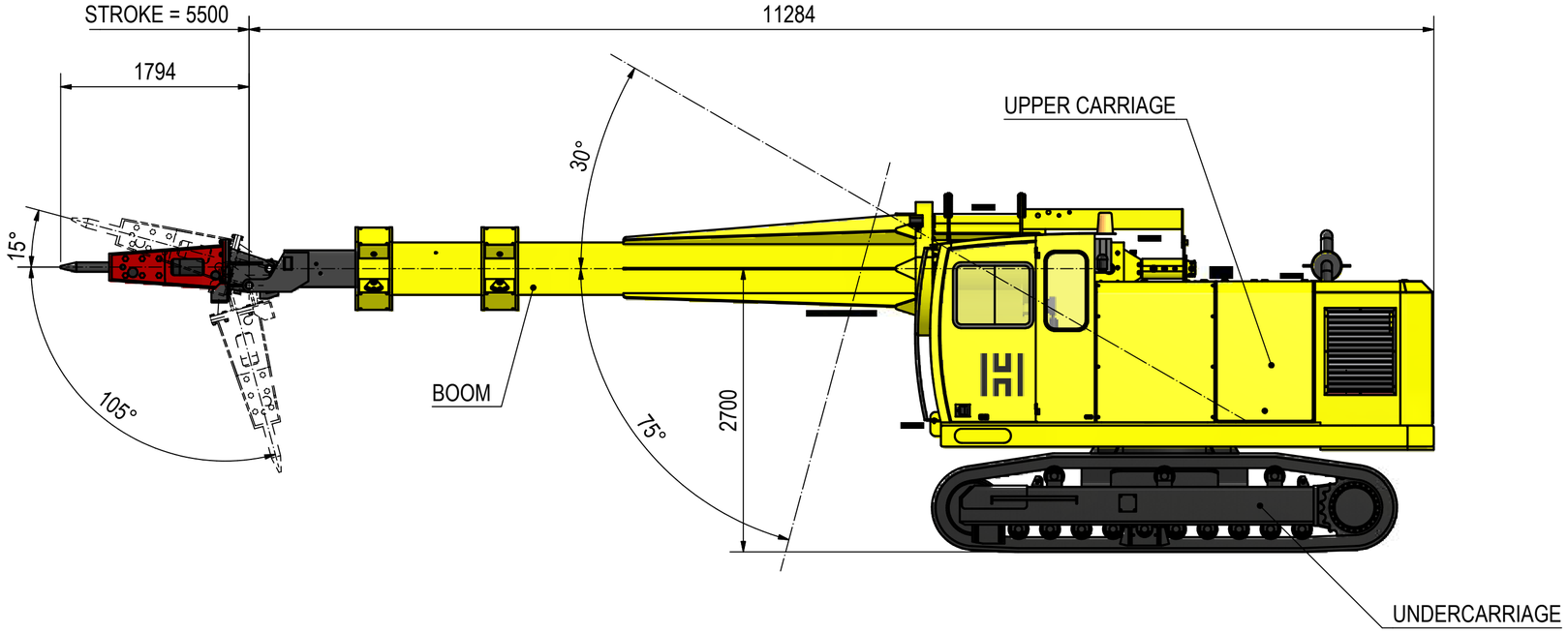

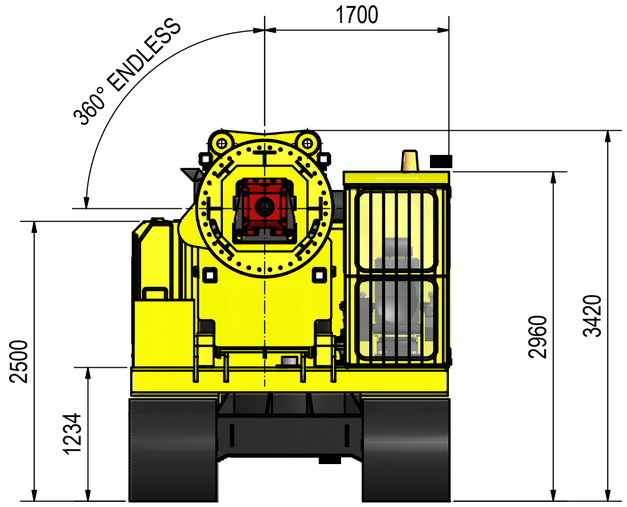

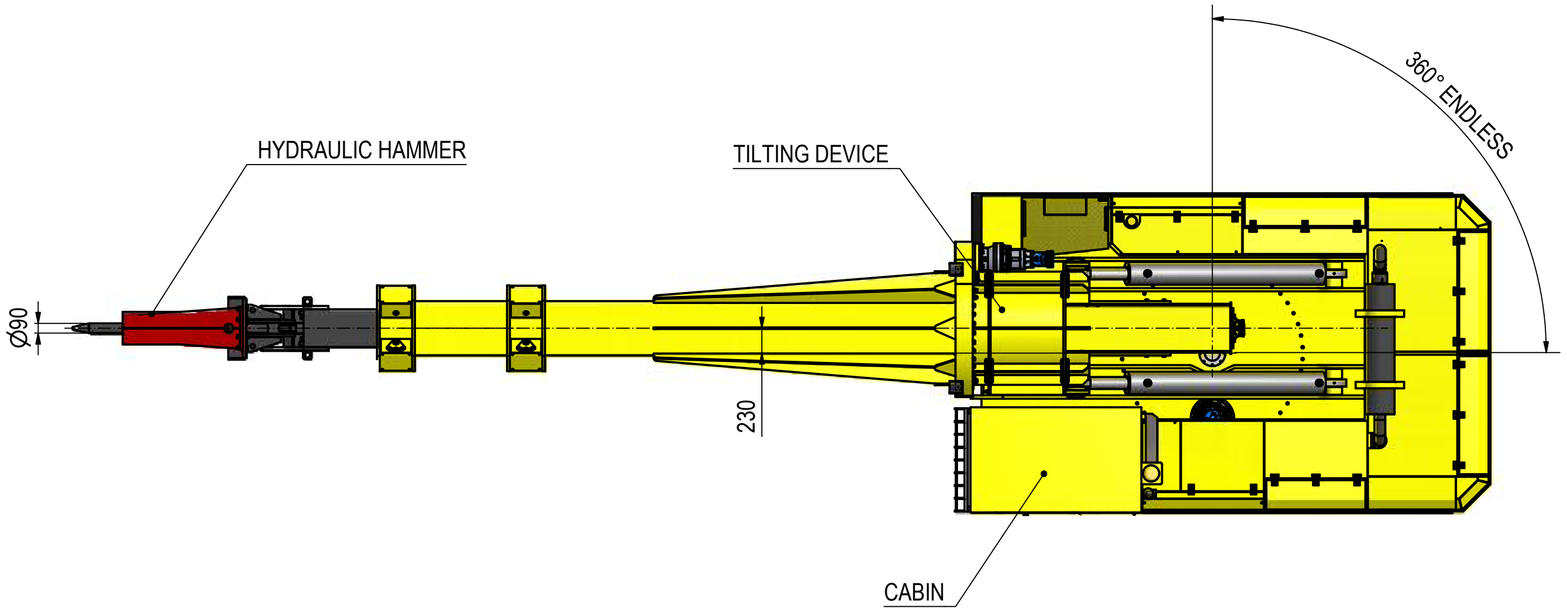

LIFTING HOOK (1:20)

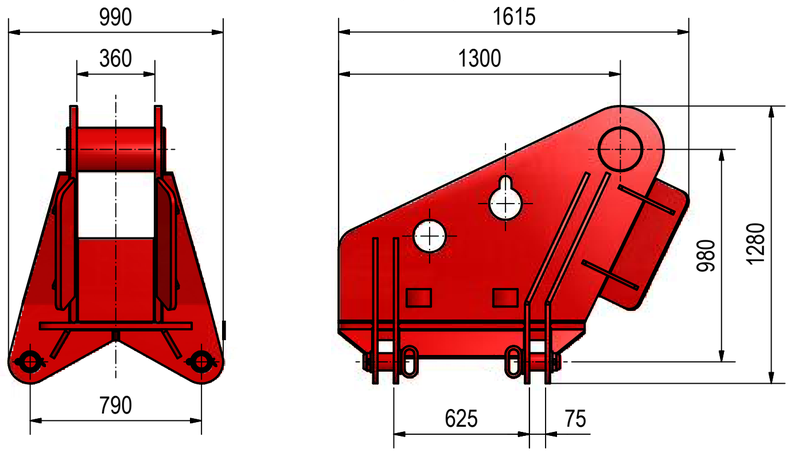

PNEUNMATIC HAMMER (1:20)

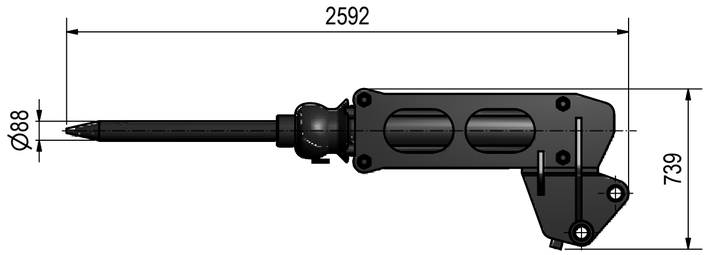

DOUBLE RIPPER HOOK (1:20)

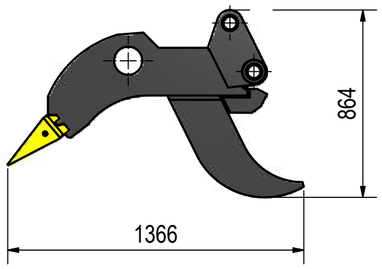

HOLTMANN

Fahrzeug- und Maschinenbau GmbH
Bernsweg 2
47445 Moers
Phone: +49 28 41 / 7 30 24
Fax: +49 28 41 / 7 62 64

The copyright of this drawing remains with us. The drawing may be reproduced without our prior consent, nor made available to other persons.

Offer No.: P2391-15	General tolerances ISO 2768-m	Projection	Scale 1:40 / Weight ~33t
			Material: Semis

	Date	Name
Rev.	06.03.2015	M. Becker
App.	06.03.2015	
Norm		

Designation: Break out machine A80N

Drawing number: P2391-15

Sheet 1 / 1 Sh

A2

State | Change | Date | Name